Light barrier amplifier

IMX-N440

Features

- Multichannel amplifier with modulated infrared light
- 4-channel installation system for tight assembly wihout cross talk
- Range up to 40 m (131 ft)
- Sensitivity for each channel adjustable
- One relay output for each channel (changeover)
- System power 20 % / 100 % selectable by bit switch
- Programmable light / dark function
- Adjustable switch-on and switch-off delay for channel one
- Light curtain mode
- Master-slave mode
- Transmitter and receiver terminals are short circuit proof

Ordering Table

Operation voltage	Order code
230 V AC	IMX-N440/230VAC
115 V AC	IMX-N440/115VAC
24 V AC	IMX-N440/24VAC
24 V DC	IMX-N440/24VDC
Accessories	**Order code**
Protective enclosure	PanBox 1x4

Safety Instructions

Warning!

The infrared light barriers IMX-N440 are not safety systems and should not be used as such systems. The devices are not to be used for applications, where personal safety is dependent on their function.

Short Description

On the 4-channel multiplexer with manual gain setting from Pantron can work up to four Sensor heads (transmitter and receiver) without the possibility of cross talk.

The multipexer has one relay output (change over) and a yellow status LED for each channel.

Different working conditions can be selected, according to the application, for each channel on the front side of the device by easy accessible DIP-switches. Consequently, the user is able to change the sensitivity value, which is adjusted to needed range and pollution, for increasing the fine adjustment of the potentiometer or to optimize the object recognition. The light curtain mode enables, that all outputs have an effect on the output from channel number one.

If more than four channels are required, multiple 4-channel multiplexers can be connected to synchronize them by master-slave operation. In this way, an influencing signal between the multiplexers will be prevented.

Infrared transmitters and receivers in different, compact and robust designs are described in the sensor heads datasheet.

Device Overview

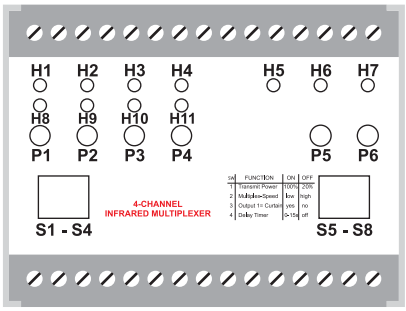

Displays and operating elements

H1-4 – Output status indicator (yellow)
H5 – Slave operation indicator (yellow)
H6 – Light curtain mode (yellow)
H7 – Power ON indicator (green)
H8-11 – Sensitivity indicator (green)
P1-4 – Sensitivity adjusters (channel 1 - 4)
P5 – Switching ON delay (relay no. 1)
P6 – Switching OFF delay (relay no. 1)
S1-4 – Switching mode (channel 1 - 4)
S5-8 – Functions

Dipswitch S1-S8

Switching mode							
S1 - channel 1		**S2 - channel 2**		**S3 - channel 3**		**S4 - channel 4**	
	dark		dark		dark		dark
	light		light		light		light

S5 - transmit power [1]		S6 - Multiplex speed [1]	
	20 %		16 ms (high)[1]
	100 %		32 ms (low)[1]

S7 - Light curtain function (Output 1 = curtain)[1]		S8 - Time delay (Delay Timer)[1]	
	inactive (no)[1]		inactive (off)[1]
	active (yes)[1]		0 - 15 s

[1] *Inscription front label*

DS150204EN - 08/2020

IMX-N440

Technical Data (at 20 °C / 68 °F)

Operating voltage ...AC	230 V AC, 115 V AC, 24 V AC / ±10%	
Operating voltage ...DC	24 V DC / ±10%	
Power consumption (max.)	...AC: 8,2 VA	...DC: 4,3 W
Power loss (max.) (EN 61439)	...230 VAC: 5,7 W ...115 VAC: 5,1 W ...24VAC: n. a.	...24VDC: 4,3 W
Operating basis	modulated infrared light	
Transmit frequency	4,0 kHz	
Transmit power	manual	
Basic transmit level	low / high	
Switching behavior	light / dark	
Multiplex speed	low: 32 ms (31 Hz) high: 16 ms (62 Hz)	
Switching delay	0...15 s	
Light curtain function	yes	
Master slave function	yes	
MTBF (IEC 61709)	$1{,}1 \cdot 10^6$ h ($T_{ambient}$ = 40 °C / 104 °F)	
Operation temperature	-25 °C ... 60 °C (-13 °F ... 140 °F)	
Storage temperature	-40 °C ... 80 °C (-40 °F ... 176 °F)	
Housing material	plastic (Makrolon 8030)	
Protection class (EN 60529)	IP20	

Mounting	top hat rail EN 60715 or 2 holes (DIN 46121)	
Electrical connection	screw terminal, 4,0 mm²	
Tightening torque (max.)	0,4 Nm	
Mounting orientation	free	
Dimensions (mm)	L 75 x B 100 x H 110	
Switching output	1 change over per channel	
Switching data (max.)	5 A / 230 V AC (24 V DC)	
Reaction time T_{ON} / T_{OFF}	25 ms / 25 ms	
Switching frequency	20 Hz	
Alarm output	—	
Test input	—	
Analog output	—	
COM interface	—	
max. Range (through beam)	Receiver IRL-...	Receiver IR-..., IRH-...
Transmitter IT-..., ITL-...	10 m (33 ft)	20 m (66 ft)
Transmitter IT-...HP, ITH-...	15 m (49 ft)	30 m (98 ft)
Transmitter ITA-...	20 m (66 ft)	40 m (131 ft)

Connection Diagram

Caution!

Before connecting the amplifier, look on the type plate and check if the power supply is the same as the connection value. Other values can impair the unit functions or destroy the amplifier.

The AC-supply devices are isolated from main. A grounded connection on the low voltage side is required.
In synchronized operation of multiple devices (master/slave), we recommend installation using short connecting cables.

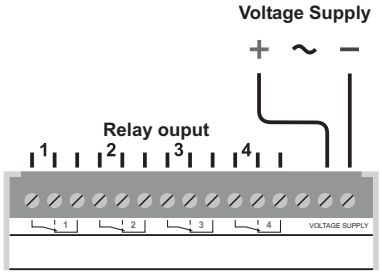

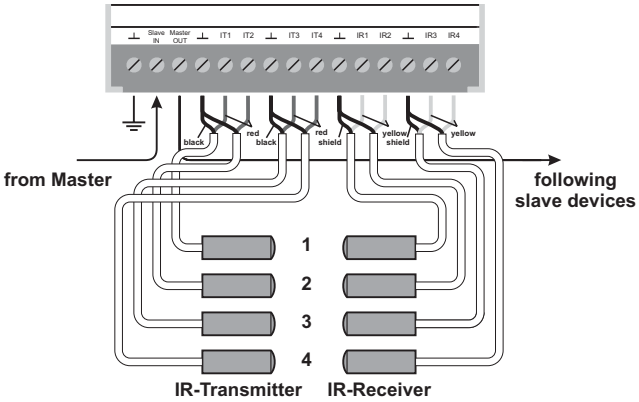

Dimensions (in mm)